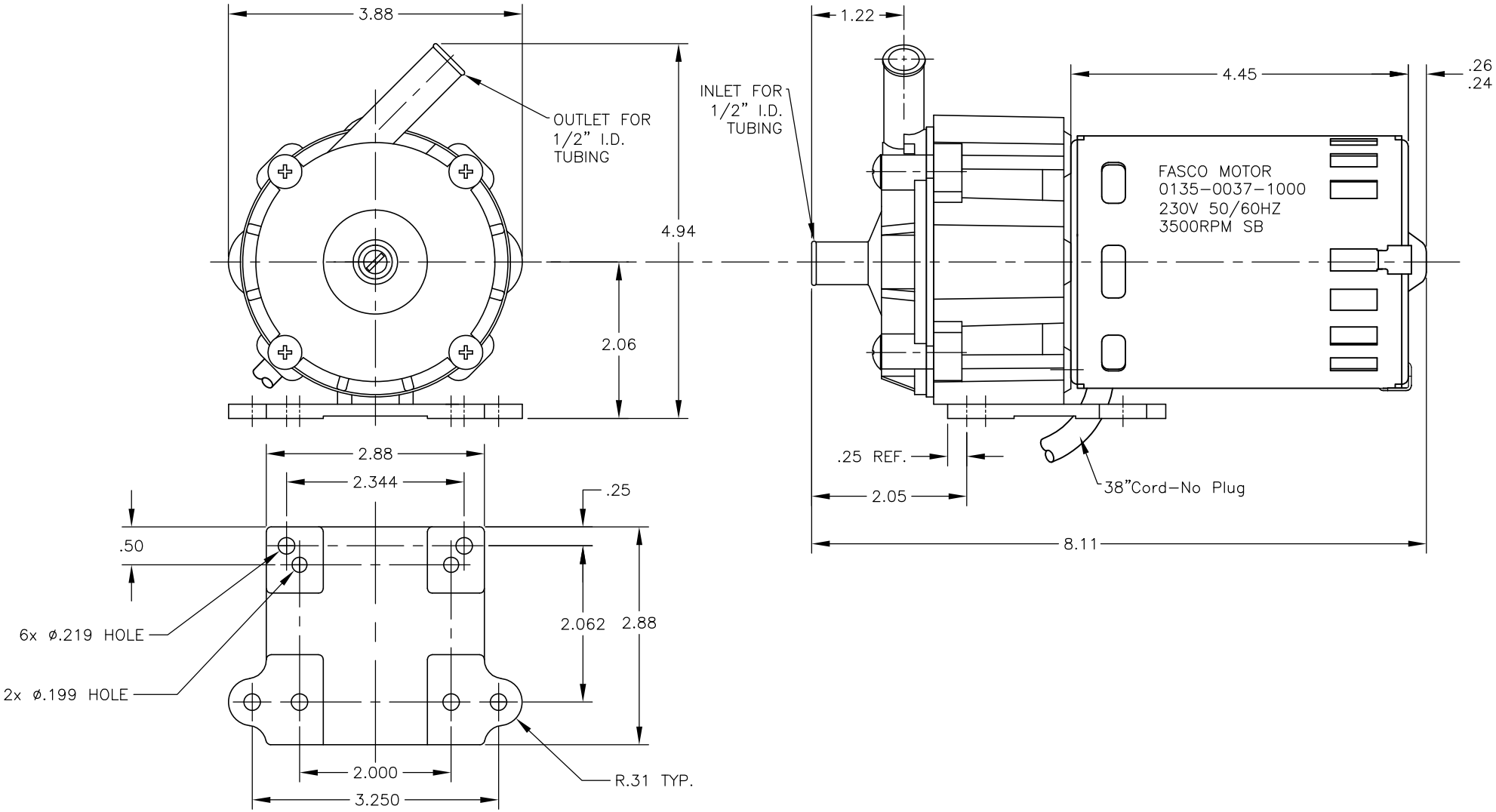

UNLESS NOTED OTHERWISE ALL DIMS. ARE IN INCHES.

DIMS.	TOL.
0.000	±0.005
0.00	±0.03
FRACTIONS	±1/64
ANGLES	±1°

MARCH MFG. INC.

1819 PICKWICK AVE. GLENVIEW, ILLINOIS

DRAWN BY JERRY	CHKD BY HANS	FINISH		DRWG SIZE 13 x 20
DATE 08/14/07	DATE 08/14/07	MOLD NO.	TOOL NO.	FIXTURE NO.

REV.	INITIALS	DATE	E.C.O.	CHANGE
G	JBT	08/14/07		Redrawn in autocad.

THIS DOCUMENT DISCLOSED SUBJECT MATTER IN WHICH MARCH MFG. INC. HAS PROPRIETARY RIGHTS, NEITHER RECEIPT NOR POSSESSION THEREOF CONFERS OR TRANSFERS ANY RIGHT TO REPRODUCE OR DISCLOSE THE DOCUMENT, ANY PART THEREOF, ANY INFORMATION CONTAINED THEREIN, OR ANY PHYSICAL ARTICLE OR DEVICE OR TO PRACTICE ANY METHOD OR PROCESS, EXCEPT BY WRITTEN PERMISSION FROM OR WRITTEN AGREEMENT WITH MARCH MFG. INC.

CUSTOMER

MATERIAL

PART NAME *Dimensional Assy MDX-3-1/2 230V 50/60HZ (w/Fasco Mtr)*

PART NO. *0135-0163-0300 d1* REV. *G*